VER.	DATE	DESCRIPTION	CHANGED BY	APPROVED BY
0	07/24'08	NEW		

Note:
1. 材質:SPCC;t=2.5mm
2. 表面處理：全件烤白色細噴點漆
3. SAMPLE TO BE ENGINEERING APPROVAL, PRODUCTION TO BE IN ACCORDANCE WITH APPROVED SAMPLE.

標註文字尺寸規格：	
A	6.8x10.3 OB孔，共2pcs。
B	∅4.5斜錐孔(90°)，共2pcs(注意方向)。

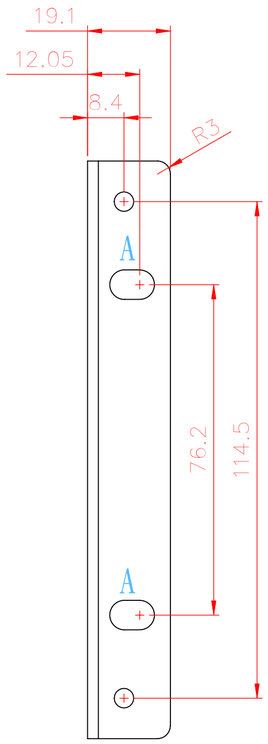

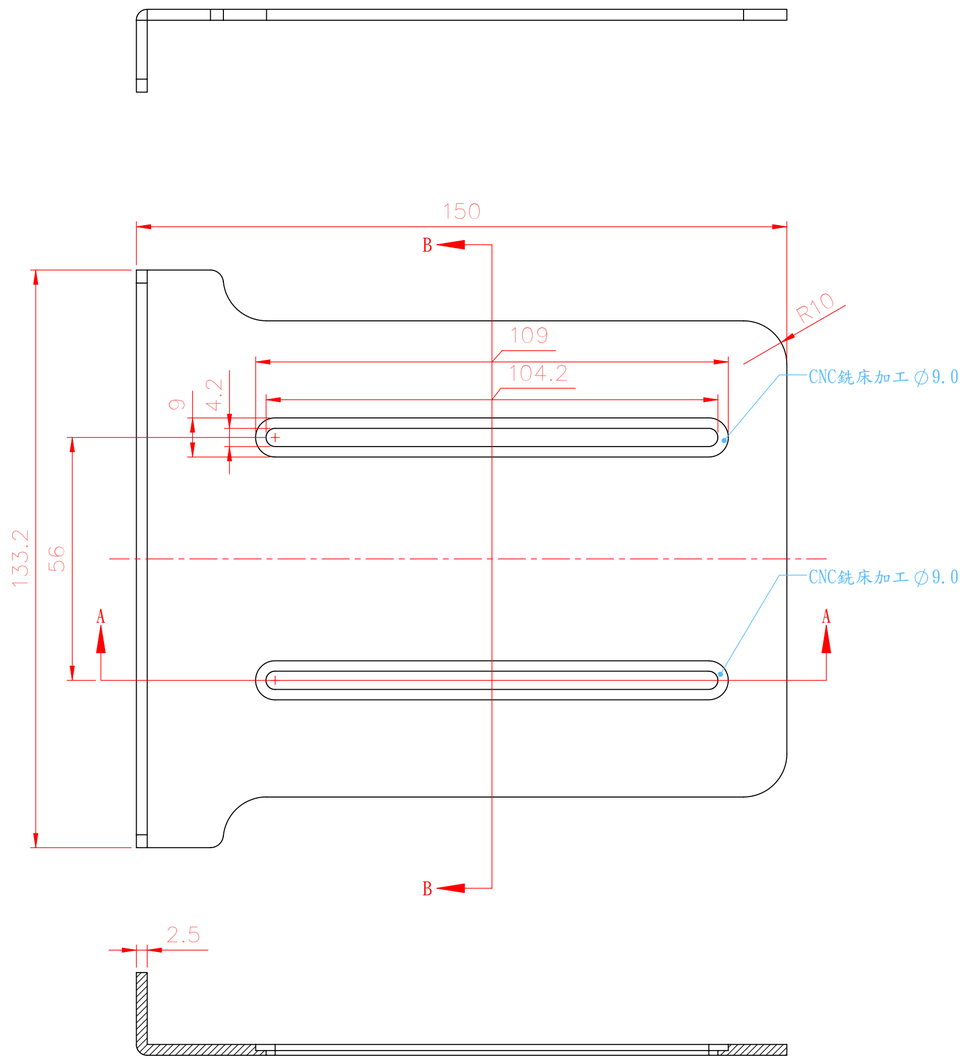

剖面圖 A-A

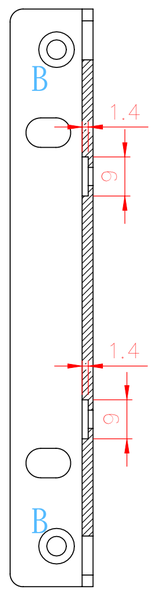

剖面圖 B-B

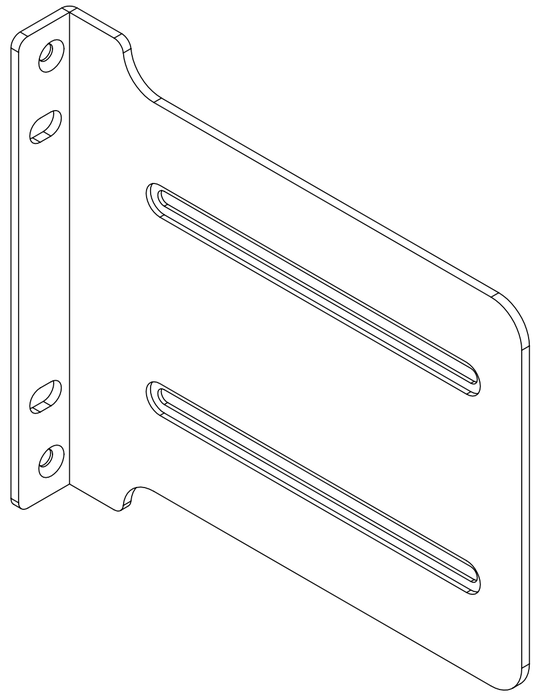

MAT'L	SEE NOTE		TOL± /RANGE			V			A2	UNIT:mm	
FINISH	SEE NOTE		0~6	0.05	0.05	0.1	0.15	0.5	SHEET	1 OF 1	
DRAWN	Tom Chiu	07/24'08	6~30	0.05	0.05	0.1	0.2	1.0	SCALE	1:1	Q'TY:1
DESIGN	Tom Chiu	07/24'08	30~80	0.1	0.1	0.2	0.3	1.5	DRAWING NO.		A2-0628
CHECK	Larry Chao	07/24'08	80~180	0.1	0.15	0.25	0.5	2.0	FILE NO.		A20628
APPRO	Larry Chao	07/24'08	180~315	0.15	0.2	0.3	1.0	2.5	PART NO.		34-30675-0000

ADLINK TECHNOLOGY INC.

DRAWING NAME: Rack-Mounted BKT

PRODUCT NAME: PXIS-2719