Winmate M-Series HMI Panel PC

15" M-Series HMI with Intel® Core™ i5-5200U

R15IHWS-MHC3

Features:

- Projected Multi Touch Screen
- Fanless Design
- Optional Optical Bonding for sunlight and outdoor viewability
- Modular Design for easy service in the field
- Support wide range 9-36V isolation DC input
- Quick & Easy Removable 2 Bay 2.5" SSD Slot

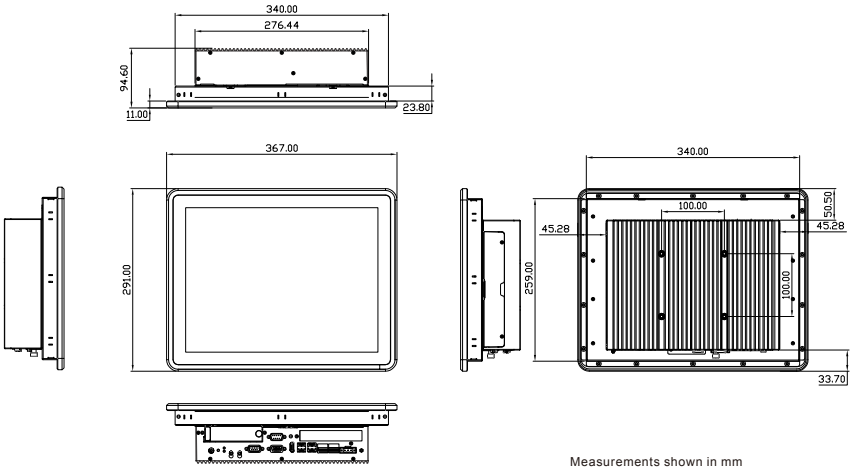

Measurements shown in mm
All Dimensions are ± 0.5 mm

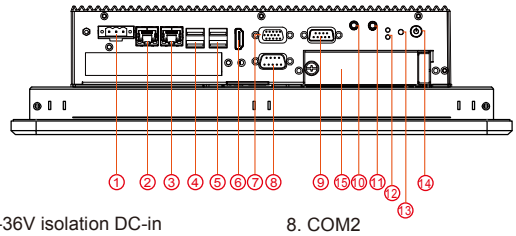

1. 9-36V isolation DC-in
2. LAN
3. LAN
4. USB 3.0 x 2
5. USB 3.0 x 2
6. HDMI output
7. VGA output
8. COM2
9. COM1
10. Audio in
11. Audio out
12. HDD indicators
13. Reset
14. Power Button
15. 2.5" SSD Bay x 2

* Note: this is a simplified drawing and some components are not marked in detail. Please contact our sales representative if you need further product information.

System Specification

Processor	:	Intel® Core™ i5-5200U Processor; 3M Cache up to 2.70 GHz
BIOS	:	AMI UEFI BIOS
System Memory	:	SODIMM DDR3L-1600 4GB, option up to 8GB (2 slots)
Graphic Chipset	:	Intel ® HD graphics 5500
Ethernet	:	1000 Base-Tx Gigabit Ethernet Compatible
Audio	:	Realtek ALC886 codec
USB	:	4 x USB 3.0
Serial Port	:	1 x RS232/ 422 / 485, 1 x RS232 isolation
Expansion Slot	:	1 x PCIex4
Main Storage	:	Built-in 64G mSATA SSD
Second Storage (optional)	:	Removable 2.5" 128G SSD x1
Touch Screen	:	Projected Capacitive
Operating system (optional)	:	Windows Embedded Standard 7
Windows Embedded 8 Standard		
		Windows 10 IoT Enterprise

Display Specification

Display Size	:	15"
Active Display Area	:	304.1 (H) x 228.1(V)
Pixel Pitch	:	0.297(H) x 0.297(V)
Display Color	:	262k/16.2M
Resolution	:	1024 x 768
Brightness	:	400 nits
Contrast Ratio	:	700:1 (Typ.)
Viewing Angle	:	80/80/70/70

Mechanical Specification

Mouting	:	Wall Mount / VESA Mount
Dimension	:	367 (L) x 291 (W) x 94.6 (H)

Power Supply

Power Input	:	9-36V isolation DC in with protection Fuse
Power Adapter	:	110-240AC to 12V DC out 80W power Adapter

Environmental Specification

Operation Temperature	:	0~ 50℃
Operating Humidity	:	30%-95% at 40℃(non-condensing, RH)
Water Proof	:	Front: IP65; Rear: IP20 / Fanless

I/O Connectors

I/O Connectors	:	9-36V isolation DC in x1 (Terminal Block 3pin)
		Gigabit LAN x 2
		USB3.0 x4
		HDMI Output x1
		D-Sub15 (VGA) Output x1
		RS232/422/485 selectable serial port x1
		RS232 isolation serial port x1
		Audio in Jack x1
		Audio out Jack x1
		Reset key x1
		Power Button x1
		2.5" SSD indicators x2

Accessories

- Mounting clips & screws
- 12V 80W power adapter
- Power cord
- Driver CD