DA-PRP-HSR Expansion Module

DA-820 Series PRP/HSR expansion module with 2 Gigabit Ethernet ports and MMS Device Manager

- IEC 62439-3 compliant
- PRP (Parallel Redundancy Protocol) to guarantee data transfer with zero-time recovery
- HSR (High-availability Seamless Redundancy) for seamless data transfer with zero-time switchover in a ring network
- PRP/HSR software configuration tools
- PRP/HSR management middleware with standard MMS interface
- Universal PCIe expansion module
- Fully compatible with Moxa DA-820 series industrial computer
- -40 to 60°C operating temperature range

Overview

The DA-PHR-PTP expansion module is compliant with IEC 62439-3 Clause 4 (PRP) and IEC 62439-3 Clause 5 (HSR) to ensure the highest system availability and data integrity for mission-critical applications that require redundancy and zero-time recovery.

With dual Gigabit Ethernet port design, the DA-PRP-HSR provides high performance for redundant network systems. In addition, the DA-PRP-HSR features a built-in native PRP/HSR management middleware with MMS server that allows SCADA to collect IEC62439-3 registers from multiple devices for easy network diagnosis, troubleshooting, device management, and monitoring.

Moxa's DA-820 series industrial computer with the DA-PRP/HSR is the ideal solution for power substation automation and process automation systems.

Appearance

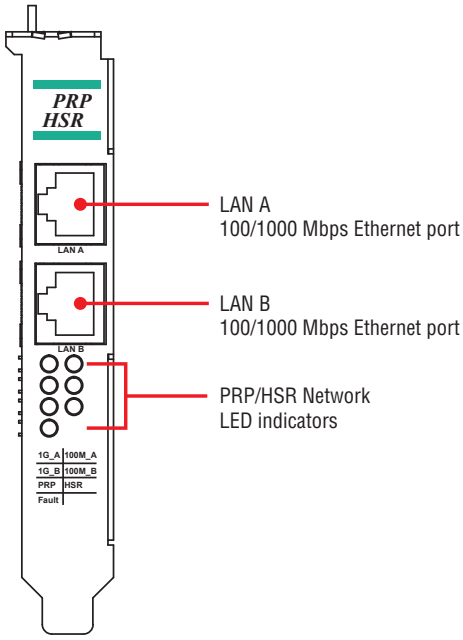

Dimensions

Unit: mm (inch)

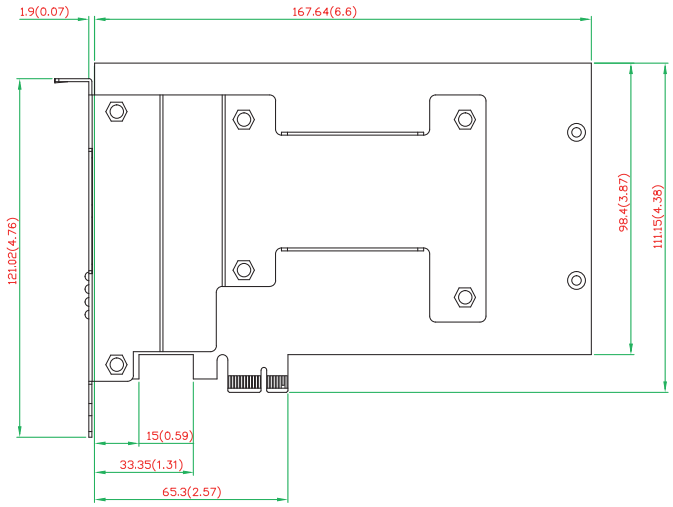

Hardware Specifications

Ethernet Interface

LAN: 2 auto-sensing 100/1000 Mbps unmanaged Ethernet switch ports (RJ45)
Magnetic Isolation Protection: 15 kV built-in

Physical Characteristics

Weight: 225 g
Dimensions: 167 x 111 mm (6.6 x 4.38 in)

Environmental Limits

Operating Temperature: -40 to 60°C (-40 to 140°F)

Standards and Certifications

Safety: LVD, UL, cUL
Electrical Substation: IEC 61850-3, IEC 60255, IEEE 1613
Protection Relay: IEC 60255
EMC: FCC, CE (Class A)
Green Product: RoHS, CRoHS, WEEE

Warranty

Warranty Period: 3 years
Details: See www.moxa.com/warranty

Software Specifications

PRP/HSR Configuration Utility

PRP/HSR Mode: Select using configuration utility
PRP/HSR Expansion: Configure multiple cards

Built-in MMS Server Management Middleware

PRP/HSR Device Information: Collect using SNMP
Registry Information: Transmit IEC 62439-3 information to SCADA system

Ordering Information

Available Models

DDA-PRP-HSR: 2-port Gigabit Ethernet expansion module compliant with IEC62439-3 protocol for Moxa DA-820 series industrial computers

Package Checklist

- 1 DA-PRP-HSR expansion module
- 2 Ethernet cable: RJ45 to RJ45 cross-over cable, 100 cm
- Documentation CD or DVD
- Quick installation guide (printed)